OptoSupply
Light It Up

5mm Bi-color Red & Blue Resistor LED

OSRBMC5B32A-12V

▪Features

- High Luminous LEDs
- 5mm Round Standard Directivity
- UV Resistant Epoxy
- Integral Current Limiting Resistor
- TTL Compatible (Requires No External Current Limiter With 12 Volt Supply)
- Cost Effective (Saves Space and Resistor Cost)
- White Diffused Type

▪Applications

- Toys/ Games/ Audio
- Other Lighting

▪Outline Dimension

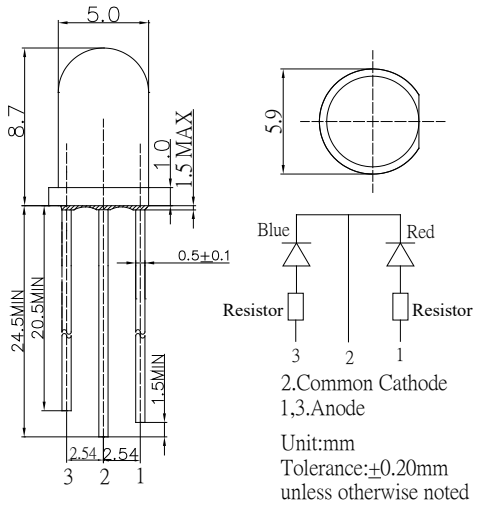

▪Absolute Maximum Rating (Ta=25℃)

Item	Symbol	Value	Unit
DC Forward Voltage	V_F	15	V
Reverse Voltage	V_R	5	V
Power Dissipation	P_D	225	mW
Operating Temperature	Topr	-30~ +85	℃
Storage Temperature	Tstg	-40 ~ +100	℃
Lead Soldering Temperature	Tsol	260℃/5sec	-

*Pulse width Max.10ms Duty ratio max 1/10

▪Directivity

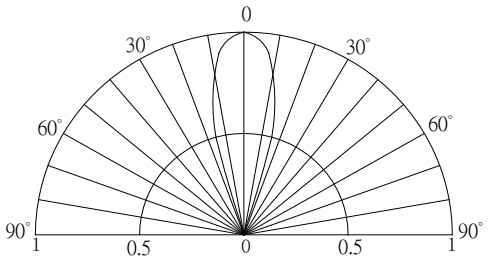

▪Electrical -Optical Characteristics (Ta=25℃)

Item	Symbol	Condition	Min.	Typ.	Max.	Unit
DC Forward Current	I_F (Red)	V_F=12V	-	10	15	mA
	I_F (Blue)	V_F=12V	-	10	15	mA
DC Reverse Current	I_R	V_R=5V	-	-	10	μA
Domi. Wavelength*	λ_D (Red)	V_F=12V	620	625	630	nm
	λ_D (Blue)	V_F=12V	465	470	475	nm
Luminous Intensity*	Iv (Red)	V_F=12V	1120	1560	-	mcd
	Iv (Blue)	V_F=12V	500	750	-	mcd
50% Power Angle	$2\theta_{1/2}$	V_F=12V	-	30	-	deg

*1 Tolerance of measurements of dominant wavelength is ±1nm

*2 Tolerance of measurements of luminous intensity is ±15%

*3 Tolerance of measurements of forward current is ±1mA

LED & Application Technologies

ISO 9001: 2008

RoHS Compliant EU 2002/95/EC

REACH The new EU chemicals legislation

ATTENTION
OBSERVE PRECAUTIONS
ELECTROSTATIC
SENSITIVE DEVICES