OptoSupply
Light It Up

# 5mm Bi-color Red & Pure Green Resistor LED

## OSRPMC5B32A-12V

## ▪Features

- High Luminous LEDs
- 5mm Round Standard Directivity
- UV Resistant Epoxy
- Integral Current Limiting Resistor
- TTL Compatible (Requires No External Current Limiter With 12 Volt Supply)
- Cost Effective (Saves Space and Resistor Cost)
- White Diffused Type

## ▪Applications

- Toys/ Games/ Audio
- Other Lighting

## ▪Outline Dimension

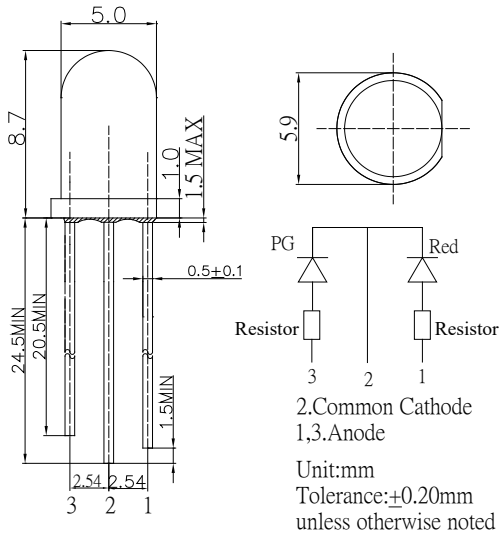


## ▪Absolute Maximum Rating (Ta=25℃)

| Item | Symbol | Value | Unit |
|---|---|---|---|
| DC Forward Voltage | $V_F$ | 15 | V |
| Reverse Voltage | $V_R$ | 5 | V |
| Power Dissipation | $P_D$ | 225 | mW |
| Operating Temperature | Topr | -30~ +85 | ℃ |
| Storage Temperature | Tstg | -40 ~ +100 | ℃ |
| Lead Soldering Temperature | Tsol | 260℃/5sec | - |

*Pulse width Max.10ms Duty ratio max 1/10

## ▪Directivity

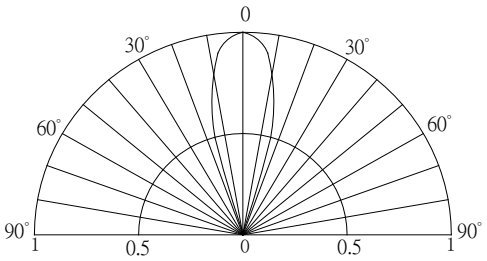


## ▪Electrical -Optical Characteristics (Ta=25℃)

| Item | Symbol | Condition | Min. | Typ. | Max. | Unit |
|---|---|---|---|---|---|---|
| DC Forward Current | $I_F$ (Red) | $V_F$=12V | - | 10 | 15 | mA |
| | $I_F$ (PG) | $V_F$=12V | - | 10 | 15 | mA |
| DC Reverse Current | $I_R$ | $V_R$=5V | - | - | 10 | μA |
| Domi. Wavelength* | $\lambda_D$ (Red) | $V_F$=12V | 620 | 625 | 630 | nm |
| | $\lambda_D$ (PG) | $V_F$=12V | 520 | 525 | 530 | nm |
| Luminous Intensity* | Iv (Red) | $V_F$=12V | 1120 | 1560 | - | mcd |
| | Iv (PG) | $V_F$=12V | 2180 | 3000 | - | mcd |
| 50% Power Angle | $2\theta_{1/2}$ | $V_F$=12V | - | 30 | - | deg |

*1 Tolerance of measurements of dominant wavelength is ±1nm

*2 Tolerance of measurements of luminous intensity is ±15%

*3 Tolerance of measurements of forward current is ±1mA