OptoSupply
Light It Up

Current Regulative LED
5mm Cylinder LED
OSXXXX5GAXB-CRLED14

CURRENT REGULATIVE LED

CRLED

- CRLED is LED which supplies constant current to keep LED Intensity Consistency even when power supply voltage fluctuations or load impedance fluctuations occur.
- CRLED is used with current stabilization and current limiting

■Features

- High Luminous Output
- 5mm Cylinder Standard Directivity
- UV Resistant Epoxy
- Color Diffused Type

■Outline Dimension

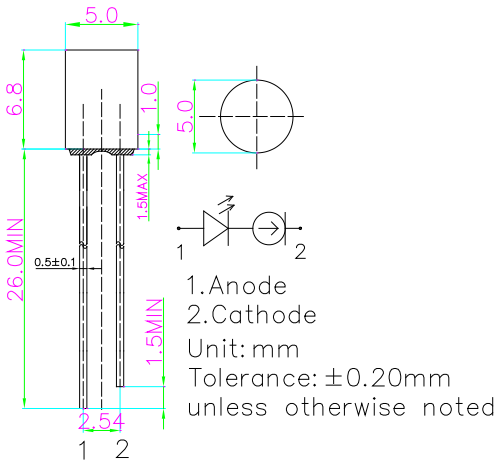

■Absolute Maximum Rating (Ta=25℃)

Item	Symbol	Value	Unit
DC Forward Voltage	V_F	20	V
Power Dissipation	P_D	320	mW
Operating Temperature	Topr	-30 ~ +85	℃
Storage Temperature	Tstg	-40~ +100	℃
Lead Soldering Temperature	Tsol	260℃/5sec	-

■Directivity

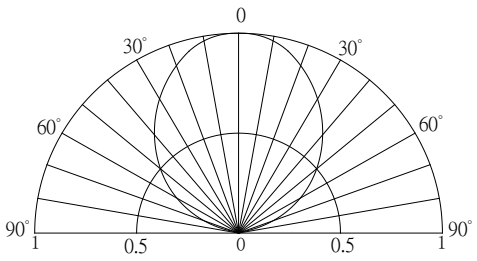

■Electrical -Optical Characteristics (Ta=25℃)

Part Number	Color		VF(V)*		IF (mA)			IR(μA)	Iv(mcd)*			λD(nm)*/CCT*			2θ1/2(deg)
			Min.	Max.	Min.	Typ.	Max.	Max.	Min.	Typ.	Max.	Min.	Typ.	Max.	Typ.
					V_F =12V			V_R=8V	V_F =12V						
OSW5DK5GA2B-CRLED14	Cool White		5.5	20	-	14	-	10	-	750	-	X=0.27, Y=0.28(CCT:8500-18000)			100
OSW4DK5GA2B-CRLED14	Pure White		5.5	20	-	14	-	10	-	750	-	X=0.31, Y=0.33(CCT:5500-8500)			100
OSM5DK5GA2B-CRLED14	Warm White		5.5	20	-	14	-	10	-	750	-	X=0.44, Y=0.41(CCT:2700-3300)			100
OSB5SA5GA4B-CRLED14	Blue		5.5	20	-	14	-	10	-	330	-	465	470	475	100
OSG5DA5GA4B-CRLED14	Pure Green		5.5	20	-	14	-	10	-	750	-	520	525	530	100
OSY5PA5GA4B-CRLED14	Yellow		5.0	20	-	14	-	10	-	500	-	585	590	595	100
OSO5PA5GA4B-CRLED14	Orange		5.0	20	-	14	-	10	-	500	-	600	605	610	100
OSR5PA5GA4B-CRLED14	Red		5.0	20	-	14	-	10	-	500	-	620	625	630	100

*1 Tolerance of measurements of chromaticity coordinate/CCT is ±10%
*2 Tolerance of measurements of dominant wavelength is ±1nm
*3 Tolerance of measurements of luminous intensity is ±15%
*4 Tolerance of measurements of forward voltage is±0.1V

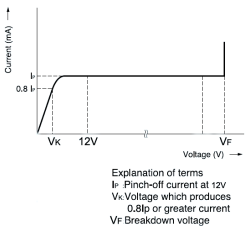

■Applications

- Electronic Signs And Signals/ Small Area Illuminations
- Back Lighting/ Toys/ Other Lighting

■Typical Applications

1 : Single LED

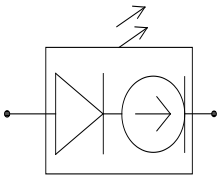

2 : Multi- LEDs in series

