OptoSupply
Light It Up

5mm Bi-color Yellow & Blue Resistor LED

OSYBMC5B32A-5V

▪Features

- High Luminous LEDs
- 5mm Round Standard Directivity
- UV Resistant Epoxy
- Integral Current Limiting Resistor
- TTL Compatible (Requires No External Current Limiter With 5 Volt Supply)
- Cost Effective (Saves Space and Resistor Cost)
- White Diffused Type

▪Applications

- Toys/ Games/ Audio
- Other Lighting

▪Outline Dimension

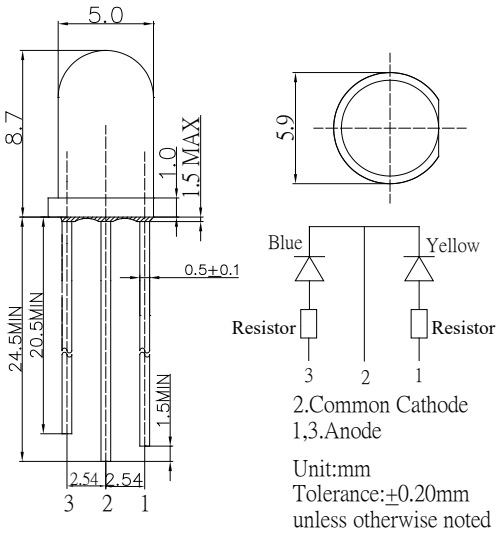

▪Absolute Maximum Rating (Ta=25℃)

Item	Symbol	Value	Unit
DC Forward Voltage	V_F	7.5	V
Reverse Voltage	V_R	5	V
Power Dissipation	P_D	150	mW
Operating Temperature	Topr	-30~ +85	℃
Storage Temperature	Tstg	-40 ~ +100	℃
Lead Soldering Temperature	Tsol	260℃/5sec	-

*Pulse width Max.10ms Duty ratio max 1/10

▪Directivity

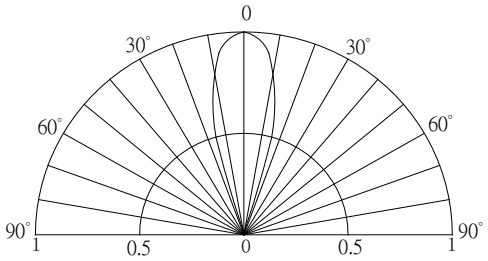

▪Electrical -Optical Characteristics (Ta=25℃)

Item	Symbol	Condition	Min.	Typ.	Max.	Unit
DC Forward Current*1	I_F (YL)	V_F=5V	-	12	20	mA
	I_F (Blue)	V_F=5V	-	12	20	mA
DC Reverse Current	I_R	V_R=5V	-	-	10	μA
Domi. Wavelength*2	λ_D (YL)	V_F=5V	585	590	595	nm
	λ_D (Blue)	V_F=5V	465	470	475	nm
Luminous Intensity*3	Iv (YL)	V_F=5V	1120	1560	-	mcd
	Iv (Blue)	V_F=5V	500	750	-	mcd
50% Power Angle	$2\theta_{1/2}$	V_F=5V	-	30	-	deg

*1 Tolerance of measurements of forward current is ±1mA
*2 Tolerance of measurements of dominant wavelength is ±1nm
*3 Tolerance of measurements of luminous intensity is ±15%