OptoSupply
Light It Up

3.2x1.0 x1.5mm Red & Blue Chip LED

OSRB1204C1E

▪Features

- Bi-Color
- Super high brightness of surface mount LED
- Compact package outline
  (L x W x T) of 3.2mm x 1.0mm x1.5mm
- Compatible to IR reflow soldering.
- Water Clear Flat Mold

▪Applications

- Backlighting (switches, keys, etc.)
- Marker lights (e.g. steps, exit ways, etc.)

▪Outline Dimension

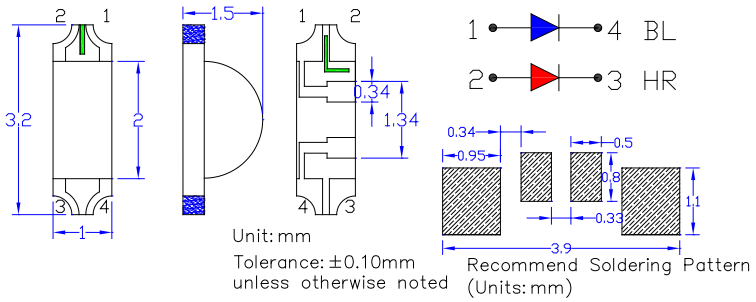

▪Absolute Maximum Rating (Ta=25°C)

Item	Symbol	Value		Unit
		HR	BL	
DC Forward Current	I_F	20	20	mA
Pulse Forward Current#	I_{FP}	100	100	mA
Reverse Voltage	V_R	5	5	V
Power Dissipation	P_D	46	66	mW
Operating Temperature	Topr	-40 ~ +85		°C
Storage Temperature	Tstg	-40~ +85		°C
Lead Soldering Temperature	Tsol	260°C/10sec		-

#Pulse width Max 0.1ms, Duty ratio max 1/10

▪Directivity

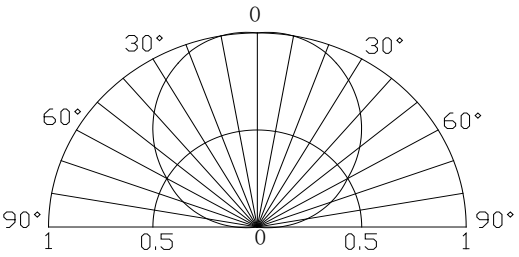

▪Electrical -Optical Characteristics (Ta=25°C)

Part Number	Color			V_F (V)			I_R(μA)	Iv(mcd)			λD(nm)			2θ1/2(deg)
				Min.	Typ.	Max.	Max.	Min.	Typ.	Max.	Min.	Typ.	Max.	Typ.
				I_F=5mA			V_R=5V	I_F=5mA						
OSRB1204C1E	Red	HR	■	-	1.7	2.3	10	-	30	-	620	625	630	120
	Blue	BL	■	-	2.7	3.3	10	-	50	-	460	465	475	120

*1 Tolerance of measurements of dominant wavelength is ±1nm
*2 Tolerance of measurements of luminous intensity is ±15%
*3 Tolerance of measurements of forward voltage is ±0.1V

■ Soldering Conditions

Reflow Soldering		Hand Soldering	
Pre-Heat	180 ~ 200°C	Temperature Soldering time	350°C Max. 3 sec. Max. (one time only)
Pre-Heat Time	120 sec. Max.		
Peak Temperature	260°C Max.		
Dipping Time	**10 sec. Max.**		
Condition	Refer to Temperature-profile		

• Reflow Soldering Condition (Lead-free Solder)

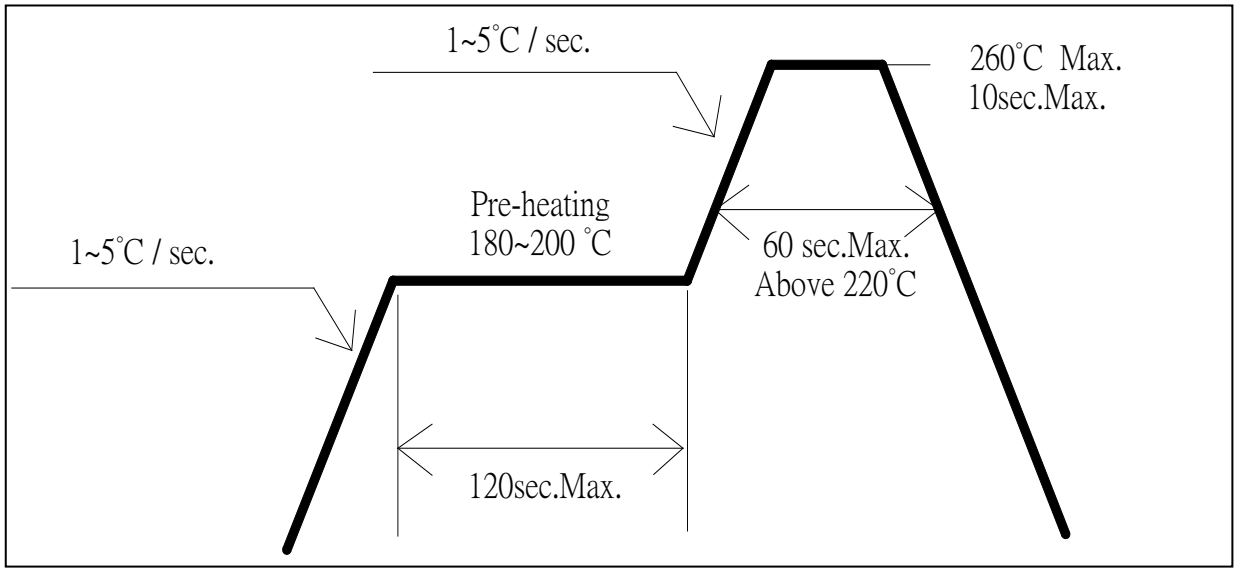

*Recommended soldering conditions vary according to the type of LED

*Although the recommended soldering conditions are specified in the above table, reflow, or hand soldering at the lowest possible temperature is desirable for the LEDs.

*A rapid-rate process is not recommended for cooling the LEDs down from the peak temperature.

•All SMD LED products are pb-free soldering available.

• Occasionally there is a brightness decrease caused by the influence of heat or ambient atmosphere during air reflow. It is recommended that the User use the nitrogen reflow method.

• Repairing should not be done after the LEDs have been soldered. When repairing is unavoidable a double-head soldering iron should be used. It should be confirmed beforehand whether the characteristics of the LEDs will or will not be damaged by repairing.

• Reflow soldering should not be done more than two times.

• When soldering, do not put stress on the LEDs during heating.

• After soldering, do not warp the circuit board.

■Packaging

1. Reel & Tape Dimensions (3000PCS/Reel)

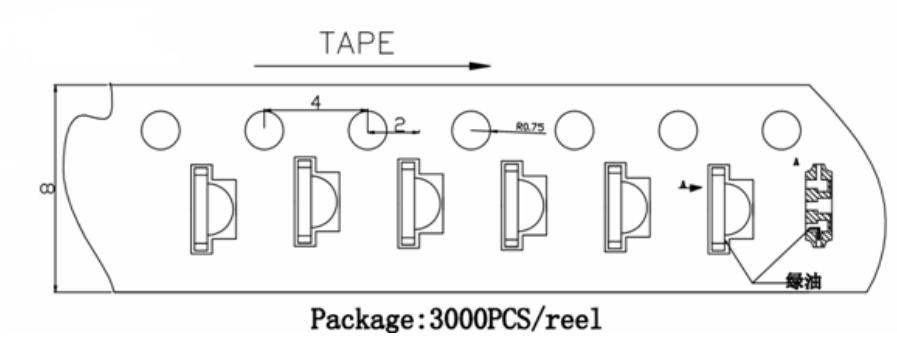

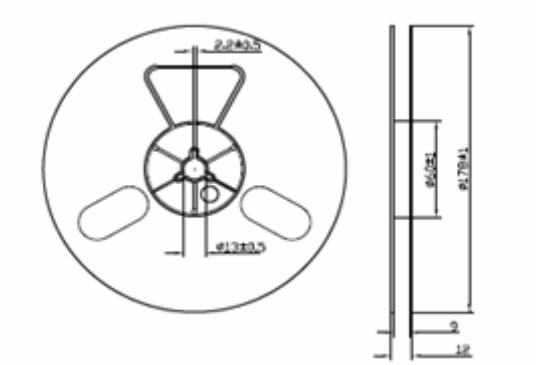

Notes: All dimensions are in millimeters

2. Bag Packaging

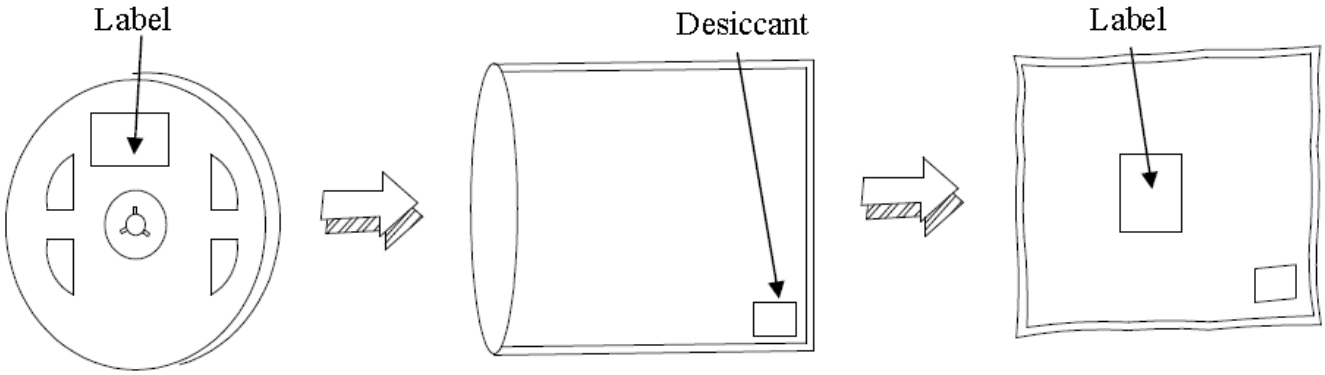

Reel Bag

■ Cautions:

1. After open the package, the LED´s floor life is 4 Weeks under 30℃ or less and 60%RH or less(MSL:2a).
2. Heat generation must be taken into design consideration when using the LED.
3. Power must be applied resistors for protection, over current would be caused the optic damage to the devices and wavelength shift.
4. Manual tip solder may cause the damage to Chip devices, so advised that heat of iron should be lower than 15W with temperature control under 5 seconds at 230-260 deg. C. (The device would be got damage in re working process, recommended under 5 seconds at 230-260 deg. C)
5. All equipment and machinery must be properly grounded. It is recommended to use a wristband or anti-electrostatic glove when handing the LED.
6. Use IPA as a solvent for cleaning the LED. The other solvent may dissolve the LED package and the epoxy, Ultrasonic cleaning should not be done.
7. Damaged LED will show unusual characteristics such as leak current remarkably increase, turn-on voltage becomes lower and the LED get unlight at low current.