OptoSupply
Light It Up

3mm Round AC LED

OSXXX23C31A

▪Features

- High Luminous Intensity
- 3mm Round Standard Directivity
- Long Lifetime Operation
- UV Resistant Epoxy
- Water Clear Type

▪Applications

- General Purpose Indicators
- Decorations
- Toys & Games
- General Use

▪Outline Dimension

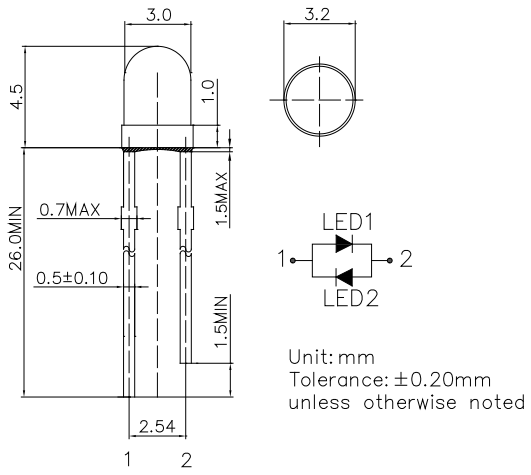

▪Absolute Maximum Rating (Ta=25℃)

Item	Symbol	Value		Unit
		W/M/BL/PG	Y/O/R	
DC Forward Current	I_F	30	30	mA
Pulse Forward Current#	I_{FP}	100	100	mA
Reverse Voltage	V_R	5	5	V
Power Dissipation	P_D	102	78	mW
Operating Temperature	Topr	-30 ~ +85		℃
Storage Temperature	Tstg	-40~ +100		℃
Lead Soldering Temperature	Tsol	260℃/5sec		-

#Pulse width Max.10ms Duty ratio max 1/10

▪Directivity

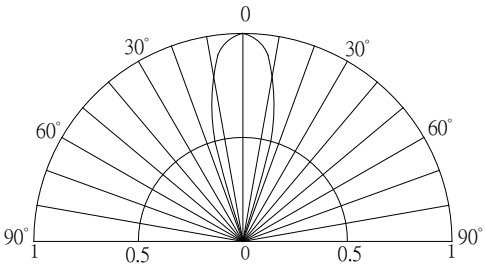

▪Electrical -Optical Characteristics (Ta=25℃)

Part Number	Color			V_F (V)*			I_R(μA)	Iv(mcd)*			Wd(nm)*/CCT(K)*			2θ1/2(deg)
				Min.	Typ.	Max.	Max.	Min.	Typ.	Max.	Min.	Typ.	Max.	Typ.
				I_F=20mA			V_R=5V	I_F=20mA						
OSWWD23C31A	Cool White	W		-	2.9	3.4	10	7000	8400	-	CCT:8000-18000K			30
OSMMD23C31A	Warm White	M		-	2.9	3.4	10	7000	8400	-	CCT:2700-3300K			30
OSBBS23C31A	Blue	BL		-	2.9	3.4	10	3000	4200	-	465	470	475	30
OSPPD23C31A	Pure Green	PG		-	2.9	3.4	10	7000	8400	-	520	525	530	30
OSYYP23C31A	Yellow	Y		-	2.1	2.6	10	4200	5800	-	585	590	595	30
OSOOP23C31A	Orange	O		-	2.1	2.6	10	4200	5800	-	600	605	610	30
OSRRP23C31A	Red	R		-	2.1	2.6	10	4200	5800	-	620	625	630	30

*1 Tolerance of measurements of chromaticity coordinate/CCT is ±10%
*2 Tolerance of measurements of dominant wavelength is ±1nm
*3 Tolerance of measurements of luminous intensity is ±15%
*4 Tolerance of measurements of forward voltage is ±0.1V