OptoSupply
Light It Up

5mm Round High-Performance Cool White LED

OS5WFL5121A-60MA

▪Features

- High Luminous Flux
- 5mm Round Standard Directivity
- UV Resistant Epoxy
- Water Clear Type

▪Outline Dimension

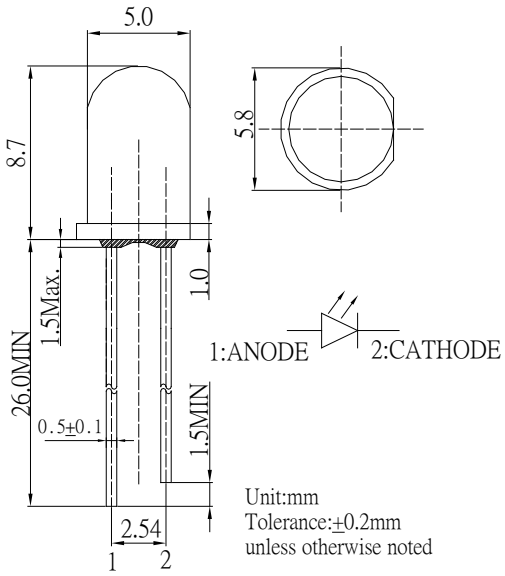

▪Applications

- Backlighting (illuminated advertising etc.)
- Substitution of micro incandescent lamps
- Reading lamps / Emergency lighting
- Industrial equipment status indicators
- Specialized illumination and DIY projects

▪Absolute Maximum Rating (Ta=25℃)

Item	Symbol	Value	Unit
DC Forward Current	I_F	70	mA
Pulse Forward Current#	I_{FP}	120	mA
Reverse Voltage	V_R	5	V
Power Dissipation	P_D	224	mW
Operating Temperature	Topr	-30 ~ +85	℃
Storage Temperature	Tstg	-40 ~ +100	℃
Lead Soldering Temperature	Tsol	260℃/5sec	-

#Pulse width Max 10ms , Duty ratio max 1/10

▪Directivity

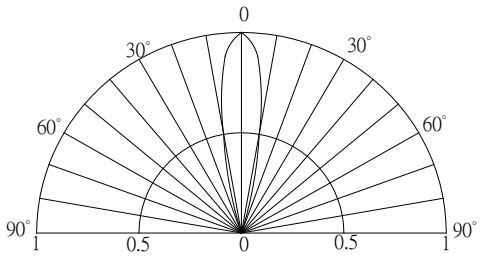

▪Electrical -Optical Characteristics (Ta=25℃)

Item	Symbol	Condition	Min.	Typ.	Max.	Unit
DC Forward Voltage*1	V_F	I_F=60mA	-	2.8	3.2	V
DC Reverse Current	I_R	V_R=5V	-	-	10	μA
Luminous Flux*2	Φv	I_F=60mA	25	30	-	lm
Luminous Intensity*3	Iv	IF=60mA	40000	50000	-	mcd
Color Temperature*4	CCT	I_F=60mA	8500	10000	18000	K
Chromaticity Coordinates*5	x	I_F=60mA	-	0.27	-	
	y	I_F=60mA	-	0.28	-	
50% Power Angle	$2\theta_{1/2}$	I_F=60mA	-	20	-	deg

*1 Tolerance of measurements of forward voltage is ±0.1V
*2 Tolerance of measurements of luminous flux is ±15%
*3 Tolerance of measurements of luminous intensity is ±15%
*4 Tolerance of measurements of color temperature is ±10%
*5 Tolerance of measurements of chromaticity coordinates is ±10%