OptoSupply
Light It Up

Φ5 x 17.5mm Long Cylinder White Resistor LED

OSW44K6E61A-5V

■Features

- High Luminous LEDs
- 5mm Round Standard Directivity
- UV Resistant Epoxy
- Integral Current Limiting Resistor
- TTL Compatible (Requires No External Current Limiter With 5 Volt Supply)
- Cost Effective (Saves Space and Resistor Cost)
- Water Clear Type

■Applications

- Illuminator
- Decorative and entertainment lighting
- Signage applications

■Outline Dimension

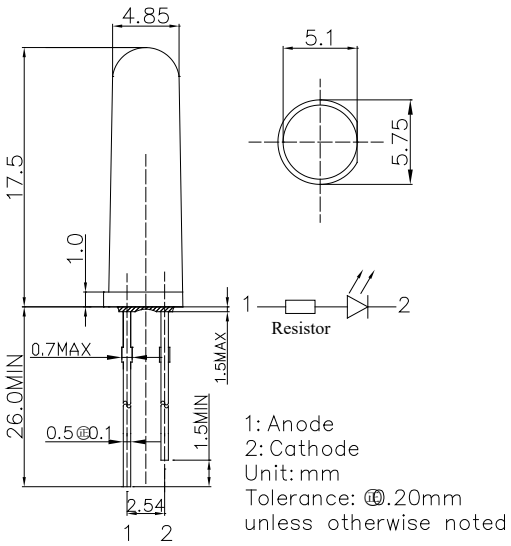

■Absolute Maximum Rating (Ta=25℃)

Item	Symbol	Value	Unit
DC Forward Voltage	V_F	7.5	V
Reverse Voltage	V_R	5	V
Power Dissipation	P_D	150	mW
Operating Temperature	Topr	-30 ~ +85	℃
Storage Temperature	Tstg	-40~ +100	℃
Lead Soldering Temperature	Tsol	260℃/5sec	-

■Directivity

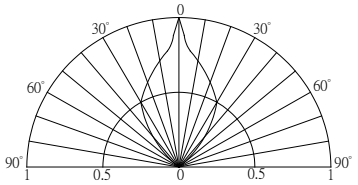

■Electrical -Optical Characteristics (Ta=25℃)

Item	Symbol	Condition	Min.	Typ.	Max.	Unit
DC Forward Current	I_F	V_F =5V	-	12	20	mA
DC Reverse Current	I_R	V_R=5V	-	-	10	μA
Color Temperature	CCT	V_F =5V	-	6500	-	K
Chromaticity Coordinates*	x	V_F =5V	-	0.31	-	
	y	V_F =5V	-	0.33	-	
Luminous Intensity*	Iv	V_F =5V	3000	4200	-	mcd
50% Power Angle	$2\theta_{1/2}$	V_F =5V	-	120	-	deg

*1 Tolerance of measurements of chromaticity coordinates is ±10%
*2 Tolerance of measurements of color temperature is ±10%
*3 Tolerance of measurements of luminous intensity is ±15%
*4 Tolerance of measurements of forward voltage is ±0.1V

LED & Application Technologies

ISO 9001: 2008

ATTENTION
OBSERVE PRECAUTIONS
ELECTROSTATIC
SENSITIVE DEVICES