OptoSupply
Light It Up

5mm Flat Top Red & Blue & Pure Green LED

OSTAMC57E2A

■Features

- High Luminous LEDs
- 5mm Flat Top Standard Directivity
- White Diffused Type
- Common Cathode Type

■Applications

- General Purpose Indicators
- Decorations
- Toys & Games
- General Use

■Outline Dimension

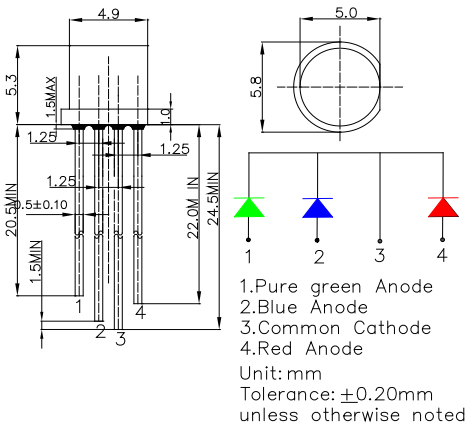

■Absolute Maximum Rating (Ta=25°C)

Item	Symbol	Value		Unit
		Red	Blue/Green	
DC Forward Current	I_F	30	30	mA
Pulse Forward Current#	I_{FP}	100	100	mA
Reverse Voltage	V_R	5	5	V
Power Dissipation	P_D	78	102	mW
Operating Temperature	Topr	-30 ~ +85		℃
Storage Temperature	Tstg	-40 ~ +100		℃
Lead Soldering Temperature	Tsol	260°C/5sec		-

#Pulse width Max.10ms Duty ratio max 1/10

■Directivity

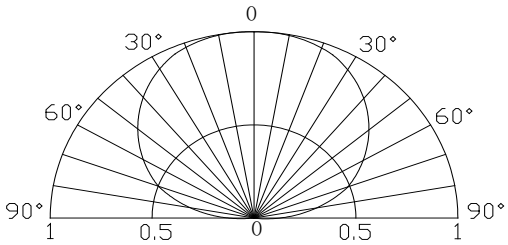

■Electrical -Optical Characteristics (Ta=25°C)

Item	Symbol	Condition	Min.	Typ.	Max.	Unit
DC Forward Voltage*1	V_F **(R)**	I_F=20mA	-	2.1	2.6	V
	V_F **(B/G)**	I_F=20mA	-	2.9	3.4	V
DC Reverse Current	I_R	V_R=5V	-	-	10	μA
Domi. Wavelength*2	λ_D(Red)	I_F=20mA	620	625	630	nm
	λ_D(Blue)	I_F=20mA	465	470	475	nm
	λ_D(Green)	I_F=20mA	520	525	530	nm
Luminous Intensity*3	I_V(Red)	I_F=20mA	500	750	-	mcd
	I_V(Blue)	I_F=20mA	330	500	-	mcd
	I_V(Green)	I_F=20mA	750	1120	-	mcd
50% Power Angle	$2\theta_{1/2}$	I_F=20mA	-	140	-	deg

*1 Tolerance of measurements of forward voltage is ±0.1V
*2 Tolerance of measurements of dominant wavelength is ±1nm
*3 Tolerance of measurements of luminous intensity is ±15%