OptoSupply
Light It Up

2x3x4mm Rectangular Yellow & Blue LED

OSYBMC7BA1B

■Features

- High Luminous Bi-color LED
- 2x3x4mm Rectangular Standard Directivity
- UV Resistant Epoxy
- Water Clear Type

■Applications

- Toys
- Games
- Audio
- Other Lighting

■Outline Dimension

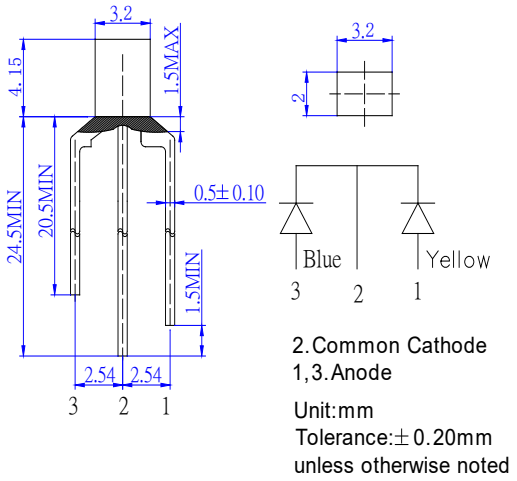

■Absolute Maximum Rating (Ta=25℃)

Item	Symbol	Value		Unit
		Yellow	Blue	
DC Forward Current	I_F	30	30	mA
Pulse Forward Current#	I_{FP}	100	100	mA
Reverse Voltage	V_R	5	5	V
Power Dissipation	P_D	78	108	mW
Operating Temperature	Topr	-30~ +85		℃
Storage Temperature	Tstg	-40 ~ +100		℃
Lead Soldering Temperature	Tsol	260℃/5sec		-

#Pulse width Max.10ms Duty ratio max 1/10

■Directivity

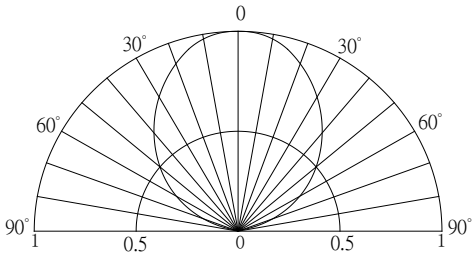

■Electrical -Optical Characteristics (Ta=25℃)

Item	Symbol	Condition	Min.	Typ.	Max.	Unit
DC Forward Voltage*	V_F (Yellow)	I_F=20mA	1.8	2.1	2.6	V
	V_F (Blue)	I_F=20mA	2.8	3.1	3.6	V
DC Reverse Current	I_R	V_R=5V	-	-	10	μA
Domi. Wavelength*	λ_D (Yellow)	I_F=20mA	585	590	595	nm
	λ_D (Blue)	I_F=20mA	465	470	475	nm
Luminous Intensity*	I_V (Yellow)	I_F=20mA	500	750	-	mcd
	I_V (Blue)	I_F=20mA	330	500	-	mcd
50% Power Angle	$2\theta_{1/2}$	I_F=20mA	-	100	-	deg

*1 Tolerance of measurements of dominant wavelength is ±1nm
*2 Tolerance of measurements of luminous intensity is ±15%
*3 Tolerance of measurements of forward voltage is ±0.1V

LED & Application Technologies

ISO 9001: 2008

ATTENTION
OBSERVE PRECAUTIONS
ELECTROSTATIC
SENSITIVE DEVICES