OptoSupply
Light It Up

8mm Round Pure White LED

OS4WFL8131A

■Features

- High Luminous Flux LED
- 8mm Round Standard Directivity
- UV Resistant Epoxy
- Water Clear Type

■Outline Dimension

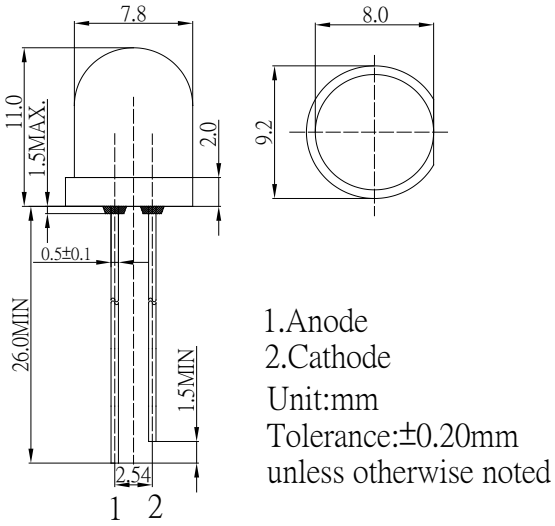

■Applications

- Backlighting (illuminated advertising etc.)
- Substitution of Micro Incandescent Lamps
- Reading Lamps / Emergency Lighting
- Marker lights (e.g. steps, exit ways, etc.)
- Flashlight

■Absolute Maximum Rating (Ta=25℃)

Item	Symbol	Value	Unit
DC Forward Current	I_F	60	mA
Pulse Forward Current#	I_{FP}	120	mA
Reverse Voltage	V_R	5	V
Power Dissipation	P_D	216	mW
Operating Temperature	Topr	-30 ~ +85	℃
Storage Temperature	Tstg	-40 ~ +100	℃
Lead Soldering Temperature	Tsol	260℃/5sec	-

#Pulse width Max 10ms , Duty ratio max 1/10

■Directivity

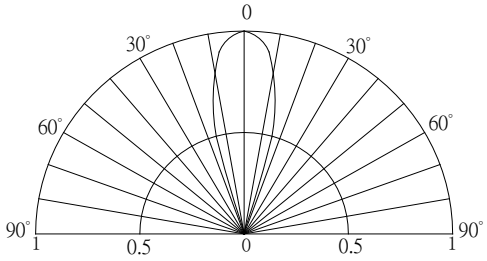

■Electrical -Optical Characteristics (Ta=25℃)

Item	Symbol	Condition	Min.	Typ.	Max.	Unit
DC Forward Voltage*1	V_F	I_F=50mA	-	3.1	3.6	V
DC Reverse Current	I_R	V_R=5V	-	-	10	μA
Luminous Flux*2	Φv	I_F=50mA	19	21	-	lm
Color Temperature*3	CCT	I_F=50mA	5500	6500	8500	K
Chromaticity Coordinates*4	x	I_F=50mA	-	0.31	-	
	y	I_F=50mA	-	0.33	-	
50% Power Angle	$2\theta_{1/2}$	I_F=50mA	-	30	-	deg

*1 Tolerance of measurements of forward voltage is ±0.1V
*2 Tolerance of measurements of luminous flux is ±15%
*3 Tolerance of measurements of color temperature is ±10%
*4 Tolerance of measurements of chromaticity coordinates is ±10%

LED & Application Technologies

ISO 9001: 2008

ATTENTION
OBSERVE PRECAUTIONS
ELECTROSTATIC
SENSITIVE DEVICES