OptoSupply
Light It Up

5.2x3.8mm Wide-angle Oval LED

OSXXXX5JF4D-12

■Features

- 5.2x3.8mm Standard Directivity
- Long Lifetime Operation
- UV Resistant Epoxy
- Color Diffused / White Diffused (W,M only)

■Applications

- Electronic Signs & Signals
- Full-Color Video Screen
- Motorway Signs
- Variable-Message Sign (VMS)
- Advertising Signs

■Outline Dimension

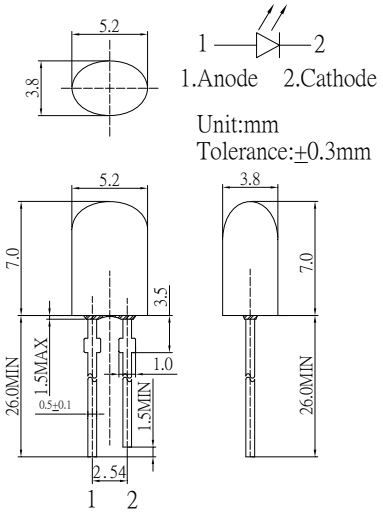

■Absolute Maximum Rating (Ta=25℃)

Item	Symbol	Value		Unit
		W/M/B/PG	Y/O/R	
DC Forward Current	I_F	30	30	mA
Pulse Forward Current#	I_{FP}	100	100	mA
Reverse Voltage	V_R	5	5	V
Power Dissipation	P_D	102	78	mW
Operating Temperature	Topr	-30 ~ +85		℃
Storage Temperature	Tstg	-40 ~ +100		℃
Lead Soldering Temperature	Tsol	260℃/5sec		-

#Pulse width Max 10ms , Duty ratio max 1/10

■Directivity

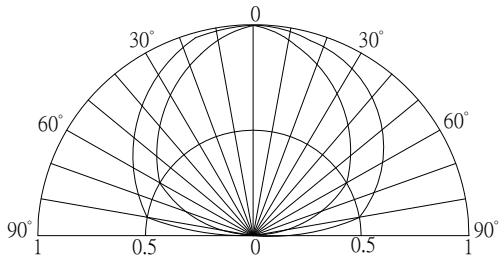

■Electrical -Optical Characteristics (Ta=25℃)

Part Number	Color			V_F (V)*			I_R(μA)	Iv(mcd)*			λD(nm)*			θ1/2(deg)
				Min.	Typ.	Max.	Max.	Min.	Typ.	Max.	Min.	Typ.	Max.	Typ.
				I_F=20mA			V_R=5V	I_F=20mA						
OSW5DK5JF2D-12	White	W		-	2.9	3.4	10	750	1120	-	Typ.X:0.27, Y:0.28			160/120
OSM5DK5JF2D-12	Warm White	M		-	2.9	3.4	10	500	750	-	Typ.X:0.45, Y:0.41			160/120
OSB5SA5JF4D-12	Blue	B		-	2.9	3.4	10	330	500	-	465	470	475	160/120
OSG5DA5JF4D-12	Pure Green	PG		-	2.9	3.4	10	750	1120	-	520	525	530	160/120
OSY5PA5JF4D-12	Yellow	Y		-	2.1	2.6	10	330	500	-	585	590	595	160/120
OSO5PA5JF4D-12	Orange	O		-	2.1	2.6	10	500	750	-	600	605	610	160/120
OSR5PA5JF4D-12	Red	R		-	2.1	2.6	10	330	500	-	620	625	630	160/120

*1 Tolerance of measurements of dominant wavelength is ±1nm
*2 Tolerance of measurements of color temperature is ±10%
*3 Tolerance of measurements of luminous intensity is ±15%
*4 Tolerance of measurements of forward voltage is±0.1V

LED & Application Technologies

ATTENTION
OBSERVE PRECAUTIONS
ELECTROSTATIC
SENSITIVE DEVICES