Model No.	OS-OLSH6620P
REV.	C0

PRODUCT SPECIFICATION FOR **LED LENS**

Models	OS-OLSH6620P
Specification	φ66*12.2
Perspective	20°
Wick	6
High Power PCB series	OSPR6X02
Material	PMMA
Transmittance	93%
Temperature	-35℃-90℃
Weight	20.5g
Tolerance	±0.2MM
Standard	SGS/ROHS
Surface Treatment	P
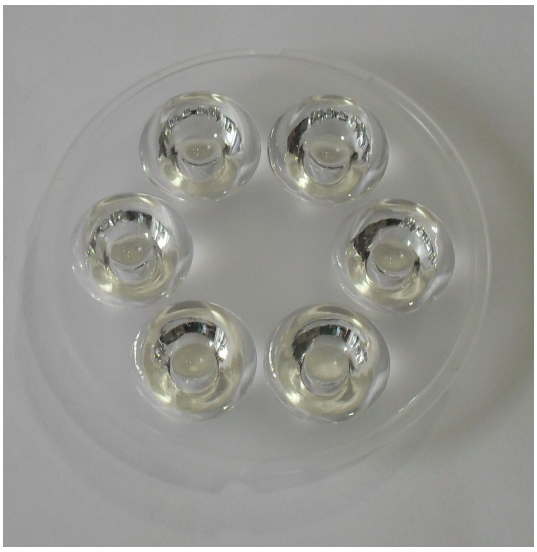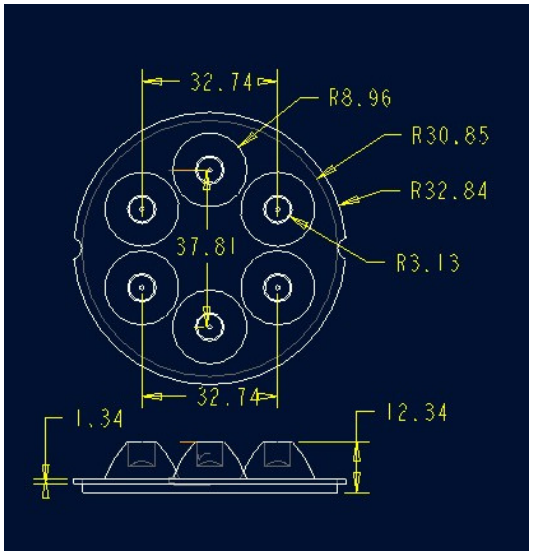
Product Picture and Dimensions: