OptoSupply
Light It Up

3mm Red & Yellow Green 2in1 Housing LED

OSRGJX3E64X-3F2B

(LED Part No: OSR5JA3E64B & OSG8HA3E64B)

▪Features

- High Luminous LEDs
- 3mm Round Standard Directivity
- UV Resistant Epoxy
- Color Diffused Type
- Holder Color: Black

▪Applications

- Indicate Lamp
- Toys/Games/ Audio
- Other Lighting

▪Outline Dimension

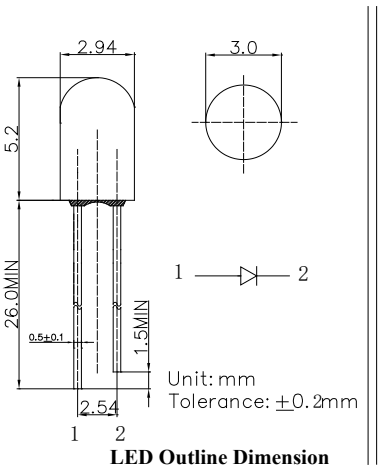

LED Outline Dimension

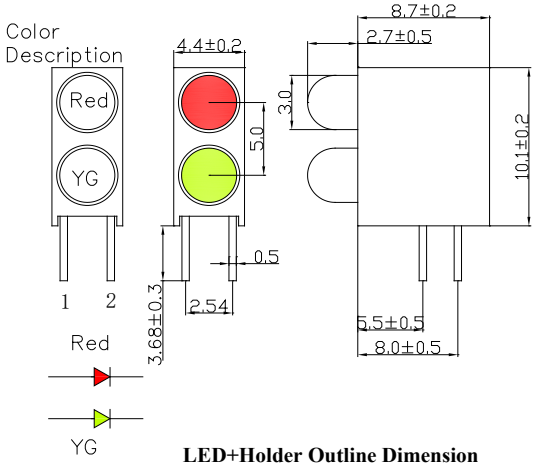

LED+Holder Outline Dimension

▪Absolute Maximum Rating (Ta=25℃)

Item	Symbol	Value		Unit
		HR	YG	
DC Forward Current	I_F	30	30	mA
Pulse Forward Current#	I_{FP}	100	100	mA
Reverse Voltage	V_R	5	5	V
Power Dissipation	P_D	78	78	mW
Operating Temperature	Topr	-30~ +85		℃
Storage Temperature	Tstg	-40 ~ +100		℃
Lead Soldering Temperature	Tsol	260℃/5sec		-

#Pulse width Max.10ms Duty ratio max 1/10

▪Directivity

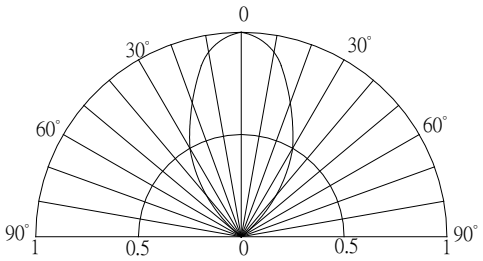

▪Electrical -Optical Characteristics (Ta=25℃)

Item	Symbol	Conditio	Min.	Typ.	Max.	Unit
DC Forward Voltage*1	$V_{F(R/YG)}$	I_F=20mA	-	2.1	2.6	V
DC Reverse Current	I_R	V_R=5V	-	-	10	μA
Domi. Wavelength*2	$\lambda_{D(HR)}$	I_F=20mA	620	625	630	nm
	$\lambda_{D(YG)}$	I_F=20mA	565	570	575	nm
Luminous Intensity*3	$I_{V(HR)}$	I_F=20mA	68	100	-	mcd
	$I_{V(YG)}$	I_F=20mA	30	45	-	mcd
50% Power Angle	$2\theta_{1/2}$	I_F=20mA	-	60	-	deg

*1 Tolerance of measurements of forward voltage is ±0.1V
*2 Tolerance of measurements of dominant wavelength is ±1nm
*3 Tolerance of measurements of luminous intensity is ±15%