OptoSupply
Light It Up

3mm Red & Yellow 2in1 Housing LED

OSRYLX3E64X-3F2B

(LED Part No: OSR5JA3E64B, OSY5JA3E64B)

▪Features

- High Luminous LEDs
- 3mm Round Standard Directivity
- UV Resistant Epoxy
- Color Diffused Type
- Holder Color: Black

▪Applications

- Indicate Lamp
- Toys/Games/ Audio
- Other Lighting

▪Outline Dimension

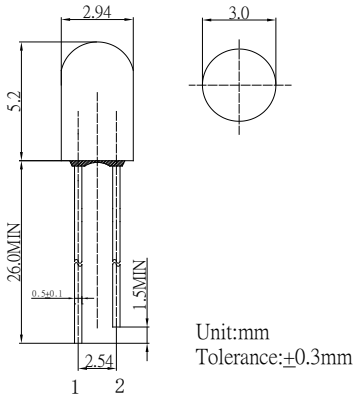

LED Outline Dimension

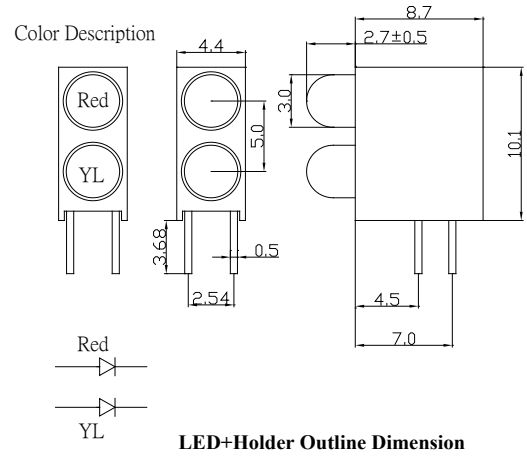

LED+Holder Outline Dimension

▪Absolute Maximum Rating (Ta=25℃)

Item	Symbol	Value		Unit
		Red	YL	
DC Forward Current	I_F	30	30	mA
Pulse Forward Current#	I_{FP}	100	100	mA
Reverse Voltage	V_R	5	5	V
Power Dissipation	P_D	78	78	mW
Operating Temperature	Topr	-30~ +85		℃
Storage Temperature	Tstg	-40 ~ +100		℃
Lead Soldering Temperature	Tsol	260℃/5sec		-

#Pulse width Max.10ms Duty ratio max 1/10

▪Directivity

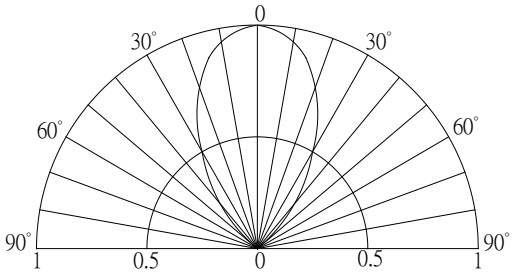

▪Electrical -Optical Characteristics (Ta=25℃)

Item	Symbol	Conditio	Min.	Typ.	Max.	Unit
DC Forward Voltage*1	V_F (R/YL)	I_F=20mA	1.8	2.1	2.6	V
DC Reverse Current	I_R	V_R=5V	-	-	10	μA
Domi. Wavelength*2	λ_D(Red)	I_F=20mA	620	625	630	nm
	λ_D(YL)	I_F=20mA	585	590	595	nm
Luminous Intensity*3	Iv(Red)	I_F=20mA	100	150	-	mcd
	Iv(YL)	I_F=20mA	100	150	-	mcd
50% Power Angle	$2\theta_{1/2}$	I_F=20mA	-	60	-	deg

*1 Tolerance of measurements of forward voltage is ±0.1V
*2 Tolerance of measurements of dominant wavelength is ±1nm
*3 Tolerance of measurements of luminous intensity is ±15%

LED & Application Technologies

ISO 9001: 2008

RoHS Compliant EU 2002/95/EC

REACH The new EU chemicals legislation

ATTENTION
OBSERVE PRECAUTIONS
ELECTROSTATIC
SENSITIVE DEVICES