OptoSupply
Light It Up

3mm Round Blue 2in1 Housing LED

OSB5YX3E34B-3F2B

(LED P/N: OSB5YU3E34B)

▪Features

- High Luminous LEDs
- 3mm Round Standard Directivity
- UV Resistant Epoxy
- Color Diffused Type
- Holder Color: Black

▪Applications

- Indicate Lamp
- Toys/Games/ Audio
- Other Lighting

▪Outline Dimension

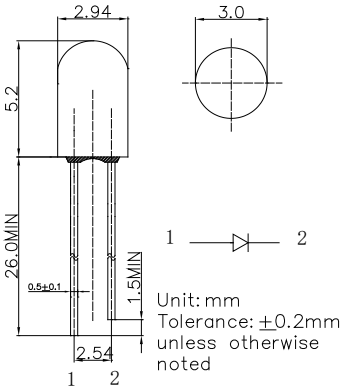

LED Outline Dimension

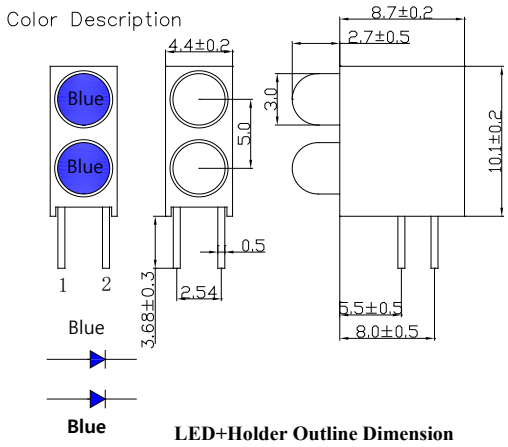

LED+Holder Outline Dimension

▪Absolute Maximum Rating (Ta=25℃)

Item	Symbol	Value	Unit
DC Forward Current	I_F	30	mA
Pulse Forward Current#	I_{FP}	100	mA
Reverse Voltage	V_R	5	V
Power Dissipation	P_D	102	mW
Operating Temperature	Topr	-30~ +85	℃
Storage Temperature	Tstg	-40 ~ +100	℃
Lead Soldering Temperature	Tsol	260℃/5sec	-

#Pulse width Max.10ms Duty ratio max 1/10

▪Directivity

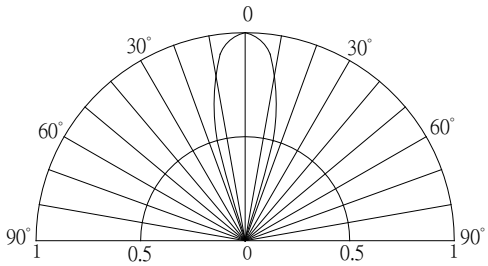

▪Electrical -Optical Characteristics (Ta=25℃)

Item	Symbol	Condition	Min.	Typ.	Max.	Unit
DC Forward Voltage*1	V_F	I_F=20mA	-	2.9	3.4	V
DC Reverse Current	I_R	V_R=5V	-	-	10	μA
Domi. Wavelength*2	λ_D	I_F=20mA	465	470	475	nm
Luminous Intensity*3	Iv	I_F=20mA	150	220	-	mcd
50% Power Angle	$2\theta_{1/2}$	I_F=20mA	-	30	-	deg

*1 Tolerance of measurements of forward voltage is ±0.1V
*2 Tolerance of measurements of dominant wavelength is ±1nm
*3 Tolerance of measurements of luminous intensity is ±15%