OptoSupply
Light It Up

5mm Red & Blue & Pure Green LED

OSTAMA5B31A

■Features

- High Luminous Output
- 5mm Standard Directivity
- Superior Weather-resistance
- Water Clear Type
- Common Anode Type

■Applications

- Toys
- Games
- Audio
- Other Lighting

■Outline Dimension

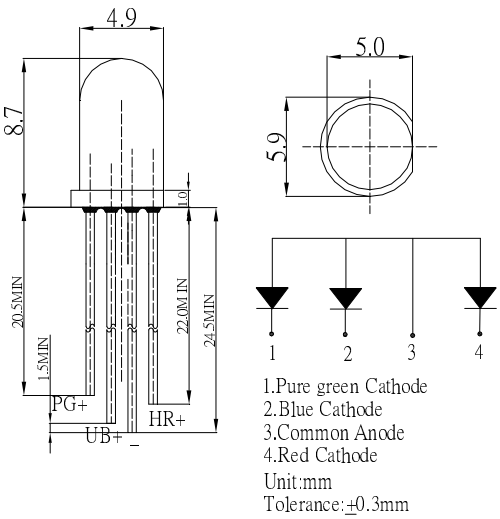

■Absolute Maximum Rating (Ta=25℃)

Item	Symbol	Value		Unit
		Red	Green/Blue	
DC Forward Current	I_F	50	30	mA
Pulse Forward Current*	I_{FP}	120	100	mA
Reverse Voltage	V_R	5	5	V
Power Dissipation	P_D	120	108	mW
Operating Temperature	Topr	-30 ~ +85		℃
Storage Temperature	Tstg	-40 ~ +100		℃
Lead Soldering Temperature	Tsol	260℃/5sec		-

*Pulse width Max.10ms Duty ratio max 1/10

■Directivity

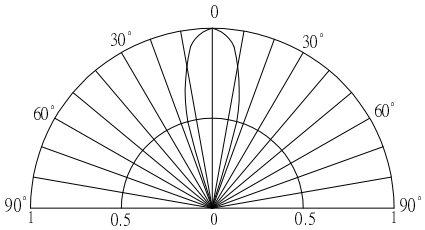

■Electrical -Optical Characteristics (Ta=25℃)

Item	Symbol	Condition	Min.	Typ.	Max.	Unit
DC Forward Voltage	V_F **(R)**	I_F=20mA	1.8	2.1	2.4	V
	V_F **(B/G)**	I_F=20mA	2.9	3.1	3.6	V
DC Reverse Current	I_R	V_R=5V	-	-	10	μA
Domi. Wavelength	**λ_D(Red)**	I_F=20mA	619	624	629	nm
	λ_D(Green)	I_F=20mA	520	525	530	nm
	λ_D(Blue)	I_F=20mA	465	470	475	nm
Luminous Intensity	**Iv(Red)**	I_F=20mA	7000	8500	-	mcd
	Iv(Green)	I_F=20mA	12000	14400	-	mcd
	Iv(Blue)	I_F=20mA	3000	4000	-	mcd
50% Power Angle	$2\theta_{1/2}$	I_F=20mA	-	30	-	deg

*1 Tolerance of measurements of dominant wavelength is ±1nm
*2 Tolerance of measurements of luminous intensity is ±15%
*3 Tolerance of measurements of forward voltage is±0.1V
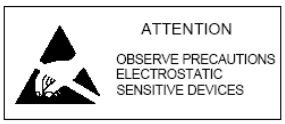
LED & Application Technologies